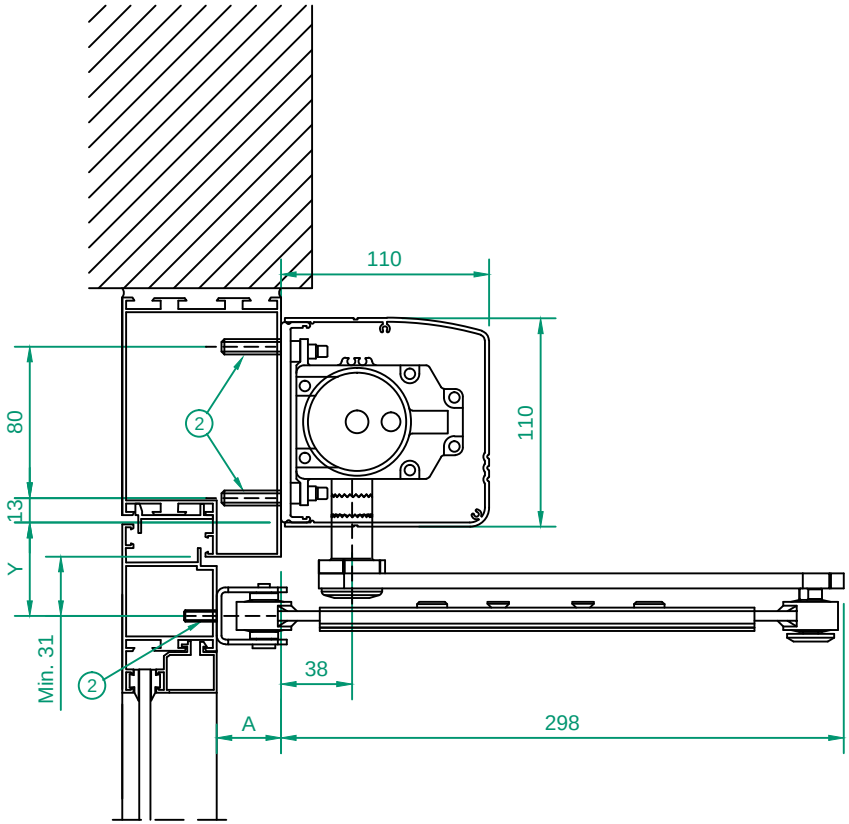

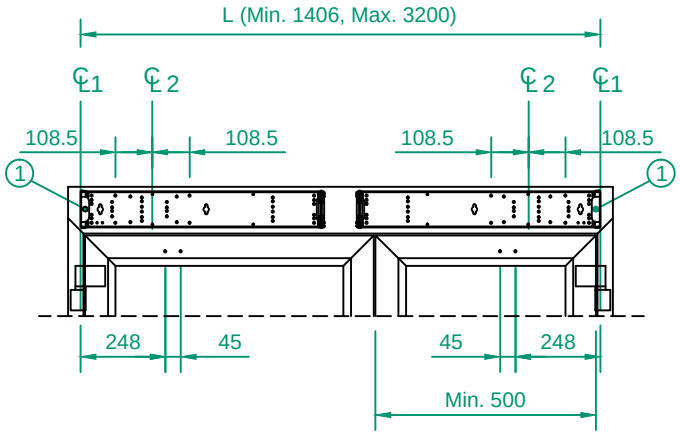

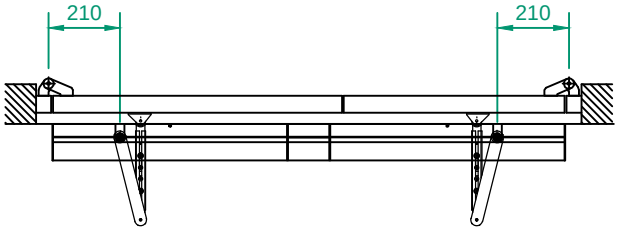

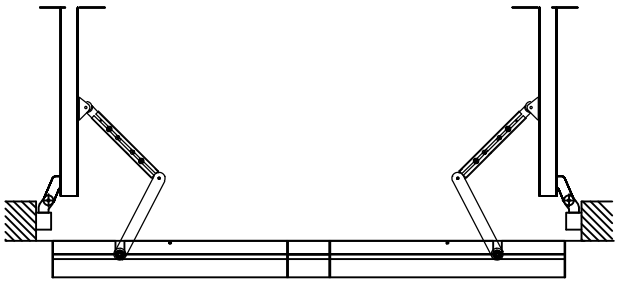

℄1	Hinges
℄2	Operator drive shaft
A	Reveal max. 130mm Optional max. 400mm
1	Cable inlet
2	Reinforcements required in door leaf and at fixing holes
Note!	State L when ordering

Y=	Shaft extension
48	0
68	20
98	50
118	70

Customer:	**Ref:**	**EM EMSW - 2** **Arm system PUSH** **Modular cover** **Swing door operator**	ENTREMATIC
Door id:	**Date:**		6.0 173673-EMEI
Project No:	**Sign:**		

© All rights in and to this material are the sole property of EntreMatic AB.
Copying, scanning, alterations or modifications are expressly forbidden without the prior written consent of EntreMatic AB. Rights reserved for changes without prior notice.